Description

Microtec MP-10 Tumbler heat press is a specialized heat transfer machine designed for customizing 20oz and 30oz tumblers and cylindrical objects with vibrant and durable designs. This tumbler press features a unique cylindrical heating element and adjustable pressure, allowing for precise and consistent heat distribution, resulting in high-quality and long-lasting prints.

The tumbler heat press has innovative structure for all-around full wrap design for good pressure, can transfer 20oz and 30oz skinny tumblers and 2pcs of 11oz or 15oz mug at one time, with better image result of full-width print.

For Microtec mug heat press, it adopts high quality mug heater. The heating coils is thicker and denser, which helps the mug press machine with more even heat distribution and longer life.

Main Features:
Customization for tumblers: The Tumbler Heat Press is specifically designed to apply designs onto tumblers and cylindrical objects, providing a professional and personalized touch.

Vibrant and durable prints: With its specialized cylindrical heating element and adjustable pressure, this heat press ensures vibrant and long-lasting prints that withstand daily use and washing.

Easy operation and versatility: The tumbler press offers user-friendly controls, making it easy to set temperature and time parameters. It can be used for various cylindrical objects, such as water bottles, travel mugs, and stainless steel tumblers.

Efficient and time-saving: The Tumbler Heat Press enables quick and efficient printing, allowing for high-volume production and meeting tight deadlines.

Feature

4 Pressure adjust knob: For different size mugs, easy to adjust the pressure

Strong Handle Grip: support handle designed for easy pressing down of mug heat press and good contact pressure.

Exchangeable Mug Heaters: This tumbler press is versatile. It comes with interchangeable mug heating elements, enabling you to customize a wide range of mug sizes and shapes.

Super Big Mug Heater: Big size mug heating element specially designed for 20oz, 30oz, 40oz tumblers sublimation printing.

Specification

Model No.	MP-10
Machine Type	Tumbler Press, Easy Heater Exchange
Mug Heater	20oz, 30oz Tumbler and 1.5oz/ 2.5oz/ 6oz-10oz/ 12oz/ 17oz/ 11oz-15oz
Controller	GY-04 Digital Time & Temperature Controller
Maximum Temp.	225℃(437℉)
Temperature Accuracy	±0.5%

Time Range	0-999 Seconds
Power	130W-260W
Voltage	220V/ 110V
Frequency	50-60Hz
Net Weight	12.75kg
Machine Size	604*426*297mm
Machine Pressure	Adjustable

Application

The tumbler heat press has innovative structure for all-around full wrap design for good pressure, can transfer 20oz and 30oz skinny tumblers and 2pcs of 11oz or 15oz mug at one time, with better image result of full-width print.

Gallery

FEATURES

*Innovative structure for all-around pressure
*Transfer 2 pcs of 11oz or 15oz Mug at one time
*Better image result of full-width print
*4 Pressure adjust Knob, more even pressure
*Simple, safe and reliable operation
*Applicable to a variety size of mug transfer
*Support Handle designed for easy pressing down
*Low energy consumption, high efficiency

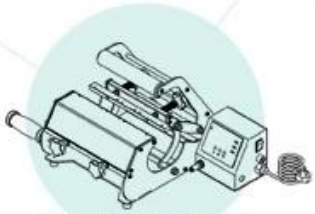

Print your colorful life
with our hot sale mug press

DISPLAY

High End
Gy-04 Digital Controller

High Efficiency

Easy Operation

High Quality Accessories
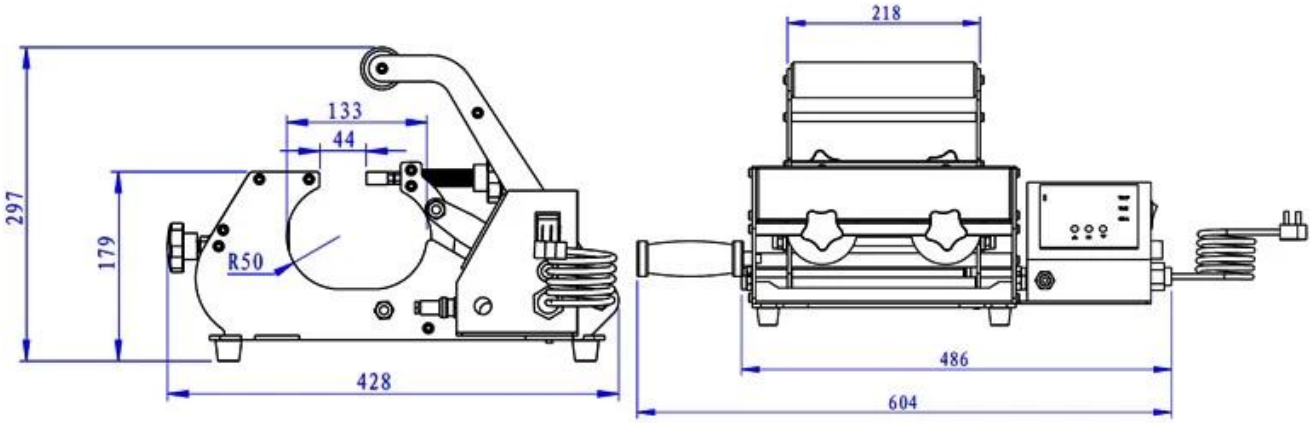
SIZE(MM)