Description

STM □□□□□□□□□ □□□□□□□□□□□□□□□□□□□□MDF □□□□□□□□□□□□□□□□□□□□

STOP

□□□□□□□□: □□□□□□□□□□□□□□□□□□□□□□□□□□□□□□□□□□□□□

GY-06 Digital Controller
PV
PV
200
030
SV
200
SV
030
COUNTER
0 13
OK
Reset

GY-06 □□□□□□□□□□□□□ □□□□□□□□□□□□□□□□□□□GY-06□□□□□□□□□□□□□□□□□□□

Gallery

STM Large Format
Semi-Automatic Heat press

Model. No.: STM-40/48/55

Feature:

- Auto open, large format
- Digital Temperature & Time Control
- Automatic Alarm
- 1 year warranty on entire press
- Wooden Package

Specification:

- Machine Type: Auto Release, Clamshell
- Platen Size: 32"x40"/40"x48"/40"x64" (80x100cm/ 100x120cm/100x140cm)
- Under Plate: Draw-out
- Controller: GY-06 Digital Time & Temp. Control
- Printable Articles: Up to 20mm Thickness
- Gas Spring Control: Yes
- Voltage: 220V 1phase/ 220V 3phase/ 380V 3phase
- Power: 5.1KW/ 7.5KW/ 9KW
- Time Range: 0-999 sec.
- Maximum Temp: 225 C
- Temperature Accuracy: ±0.5%
- High Pressure: 8KG/CM
- Packing Size: 154x124x147cm / 154x142x147cm / 149x159x149cm
- Gross Weight: 450kg (Wooden Package)

Recycled Cotton Pad
Strong Arm
Emergency Stop Switch
Anti-scald Protection
Metal Cover
058 059
GY-06 Digital
Time & Temp. Control
Draw-out Under Plate

Application:

♦Especially for Large Size colth, banner, also for T-shirt, Puzzle, Mouse Pad, Metal Board, Fridge Magnet, Coaster, Slipper, Bag, Cushion etc

Assembly Drawing:

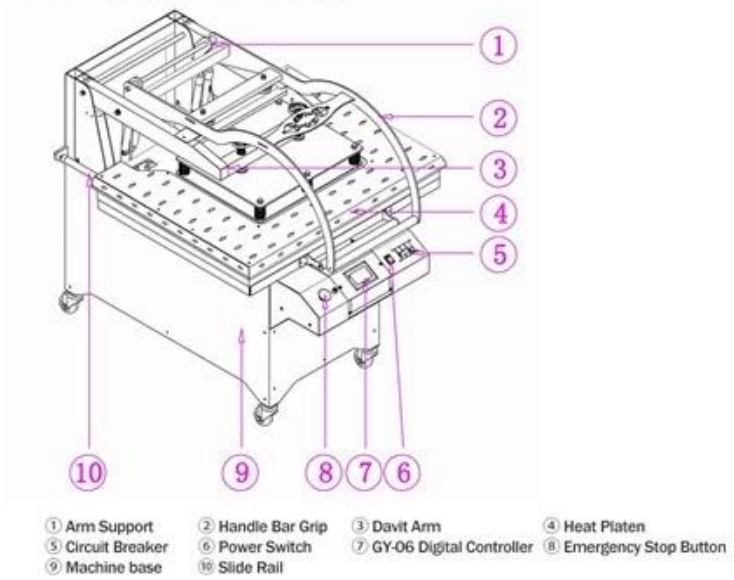

Packing:

The machine is packed in strong wooden package and provide with manual.
(154x124x147cm / 154x142x147cm / 149x159x149cm)

Machine Warranty

Microtec □□□Microtec □□□□□□□□□□□□□□□□□□□□